Reg. No. [ ][ ][ ][ ][ ][ ][ ][ ][ ][ ] **[18AN53]**

FIFTH SEMESTER B.Tech EXAMINATION, MARCH–2022

AIRCRAFT STRUCTURES

Time:3 Hours **Maximum Marks:70**

Instructions:
i. Answer **FIVE** full Questions. Question number 1 and 2 are compulsory. Each question carries 14 marks.
ii. Missing data may be suitably assumed.

1. a. State static equilibrium and for a 3D non coplanar, concurrent force system in XYZ space state the equations of equilibrium. **04**

b. Define space trusses and state stability criteria for a space truss. **04**

c Calculate the member loads and stresses of the pin ended space truss in Fig.1c . All members, AB, AC and AD have a solid circular cross section of 20mm diameter. Identify the maximum stressed member. A, B, C, and D are ball and socket connections. **06**

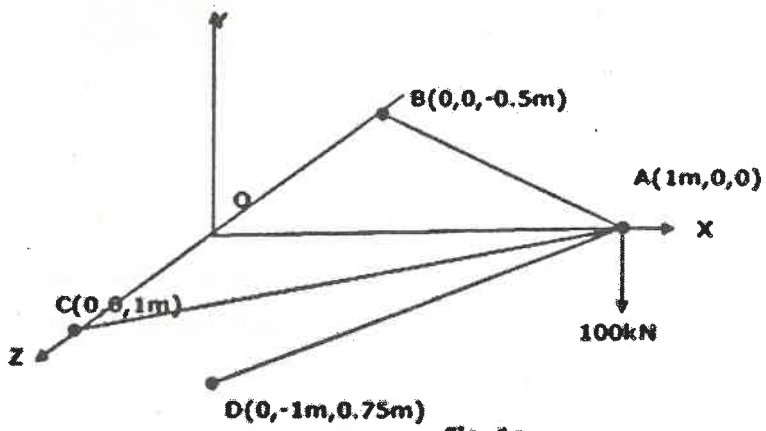

Fig. 1c

2. a. State the unsymmetrical bending stress equation of an arbitrary cross section subjected to bending moments Mx and My. **04**

b. Define shear center and its importance. **04**

c Calculate the position of the shear center of the thin walled channel section shown in Fig.2c.The thickness t of the walls is constant. **06**

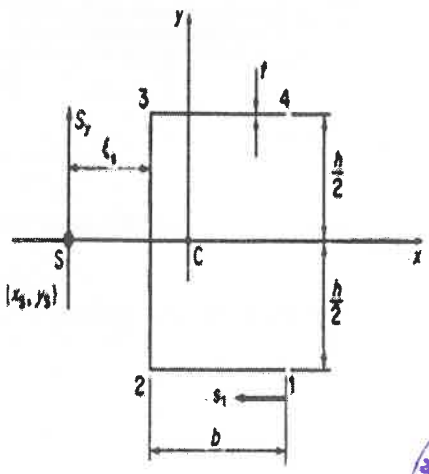

Fig. 2 (c)

JAIN (Deemed-to-be University) Learning Resource Centre Jain Global Campus Ramanagar-112

3. a. What are the effects of *idealization* on the stress distribution and the geometry of the structure? **04**

b. The fuselage section shown in Fig.3b is subjected to a bending moment of 100kNm applied in the vertical plane of symmetry. If the section has been idealized into a combination of direct stress carrying booms and shear stress only carrying panels, determine the direct stress in each boom. **10**

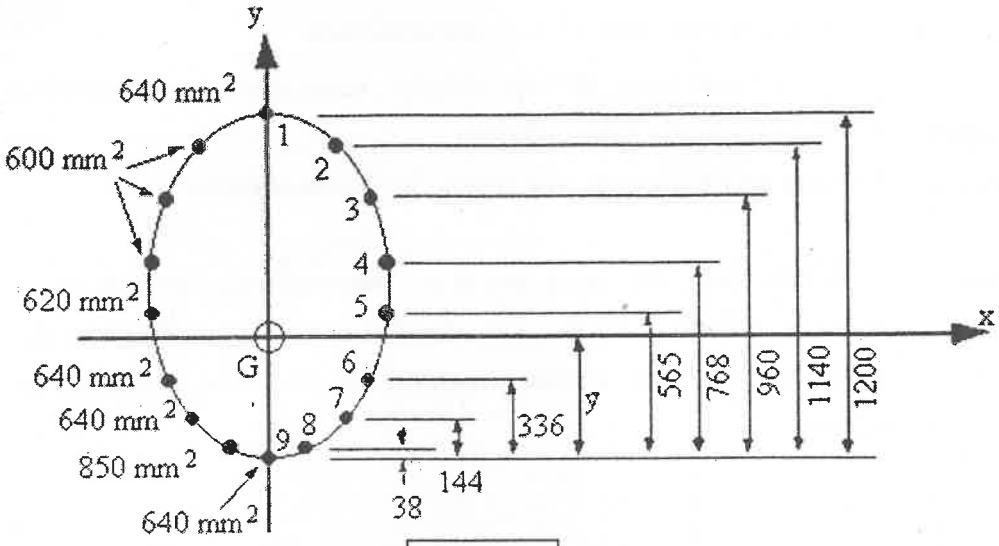

Fig. 3b

OR

4 Idealize and determine the direct stress in the flanges and shear flow in the web of the tapered wing spar beam shown in Fig. 4 at a section midway along its length. The web has thickness 2mm and area of each flange is 400mm² **14**

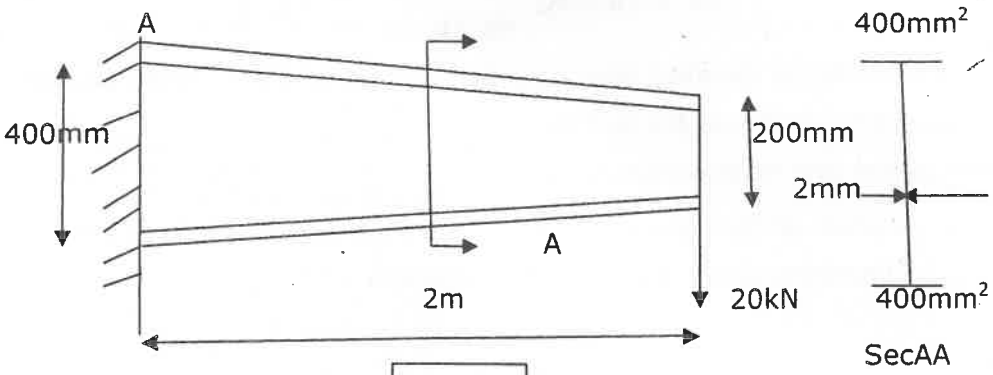

Fig. 4

5. a. Explain unit load method for calculating deflection of a linear structure. **04**

b. Using the principle of superposition and unit load method determine the deflection and slope due to load P and moment M, acting simultaneously at the tip of the cantilever beam shown in Fig. 5b. **10**

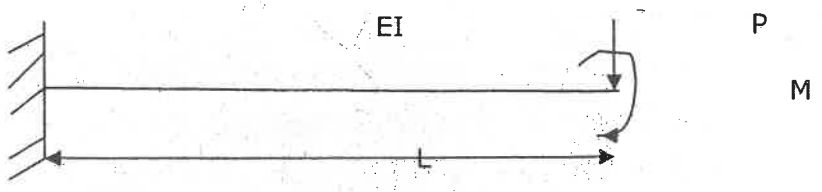

Fig.5b

OR

6. For an elastic structure whose load **P**- deflection **y** variation is represented by **P=by^n** where the coefficient b and exponent n are constants, derive expressions for Strain energy and Complementary energies and deduce for a linear elastic structure strain energy and complementary energies are interchangeable and illustrate it graphically. **14**

7. a. Explain elastic instability due to buckling of a column and what is the critical load and effective length of a fixed free column having bending stiffness EI and length L. **04**

b. For the given steel truss structure in Fig. 7 what should be the maximum weight W, so that collapse of the structure due to buckling is avoided. Assume E= 200 Gpa **10**

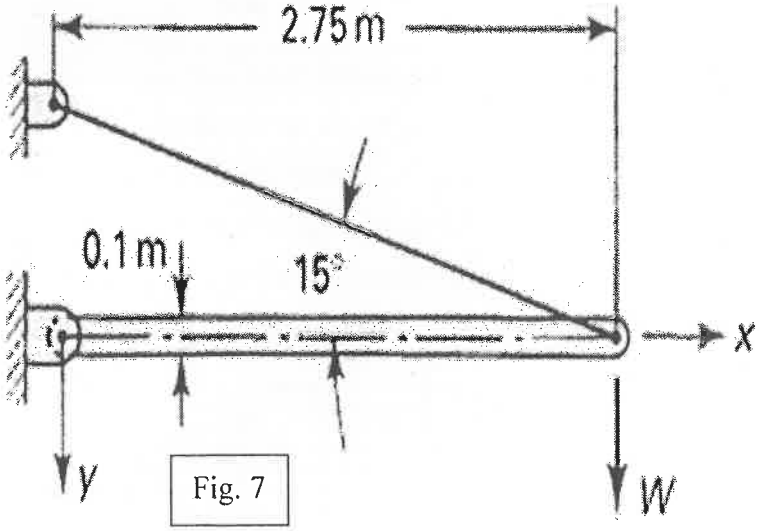

Fig. 7

OR

8 An initially bent column of length *L* and bending stiffness *EI* is subjected to an increasing axial load *P*. Derive an expression for the maximum bending moment. What happens when $P \longrightarrow P_{cr}$ **14**